MEET INTERNATIONAL STANDARD API5B

DIGITAL INTERNAL THREAD TAPER MEASURING INSTRUMENT

principle of measurement

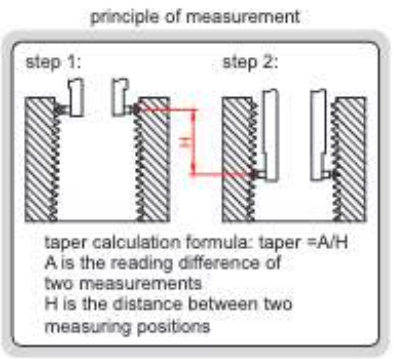



2241-6

- Measure the taper of internal thread
- Digital indicator stroke: 25.4mm/1"
- Optional accessory:
  wireless transmitter code **7315-50M** (receiver is needed) page 8,
  ball points (code **6252** series)

Unit: mm

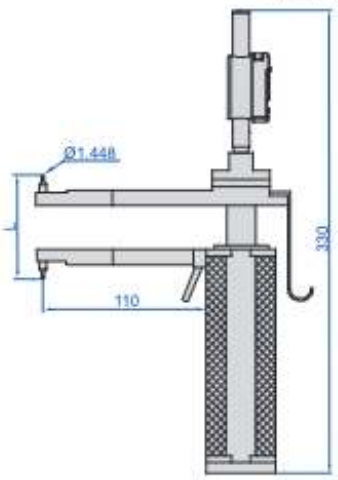

Code	Range (L)	Travel of measuring tip	Resolution	Any 6mm accuracy
2241-6	1.5-6"/38.1-152.4mm	1"/25.4mm	0.0005"/0.01mm	0.04mm

BALL POINTS

- Supplied in pair
- For taper measuring instruments (code **2230**, **2231**, **2240**, **2241**) and pitch measuring instruments (code **2234**, **2235**, **2245**)



6252-B10

Code	Thread type	Threads per inch	Ball dia. (Ød)	
			taper	pitch
6252-B8	round thread, line pipe	8	1.829mm	1.829mm
6252-B10	round thread, line pipe	10	1.448mm	1.448mm
6252-B115	line pipe	11.5	1.27mm	1.27mm
6252-B14	line pipe	14	1.041mm	1.041mm
6252-B18	line pipe	18	0.813mm	0.813mm
6252-B27	line pipe	27	0.533mm	0.533mm
6252-B5	buttress thread	5	2.286mm	—
6252-B51	buttress thread	5	—	1.575mm
6252-B52	extreme line thread	5,6	1.524mm	—
6252-B53	extreme line thread	5	—	2.667mm*
6252-B6	extreme line thread	6	—	2.210mm*

*0.58mm off the top of ball

Unit: mm

