MAGNETIC SINE TABLE

ATTENTION:
NOT HARDENED



6538-100

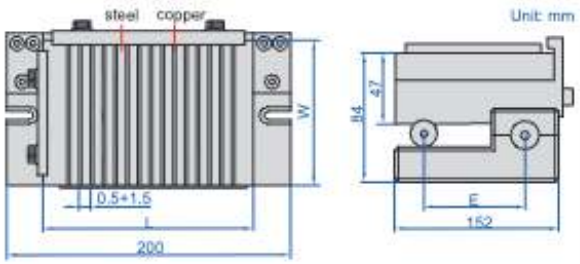

Code	Table size (L×W)	Roller distance (E)	Adjustable angle	Accuracy of angle
6538-100	150×150mm	100mm	0-60°	±15 seconds

PRECISION SINE VISES

- Parallelism: 5μm/100mm
- Squareness: 5μm/100mm
- Adjustable angle: 0-55°
- Accuracy of angle: ±20 seconds
- Made of alloy steel
- Hardness HRC58-60



6513-85

(mm)

Code	Jaw opening (Q)	Jaw width (W)	Roller distance (E)	L	H	M
6513-65	0-65	50	100	150	85	25
6513-85	0-85	63	100	185	91.5	32
6513-100	0-100	73	150	205	105	35
6513-1001	0-100	80	150	215	108	40
6513-125	0-125	88	150	245	108	40
6513-1251	0-125	100	200	255	116	45
6513-160	0-160	125	200	295	125	50
6513-175	0-175	150	200	315	125	50

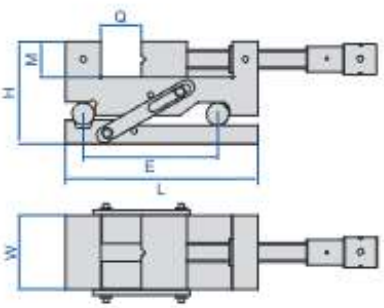

PRECISION SINE VISE

there is a 1mm step (accuracy +/-0.002mm). gauge blocks smaller than 0.5mm are not available. if small gauge blocks are needed (for example, 0.25mm), a gauge block 1.25mm can be used in order to make 1.25mm-1mm=0.25mm





6523-80

- Parallelism: 3μm/100mm
- Squareness: 5μm/100mm
- Accuracy of angle: ±15 seconds
- Made of SKS tool steel, subzero treatment
- Hardness HRC58-60

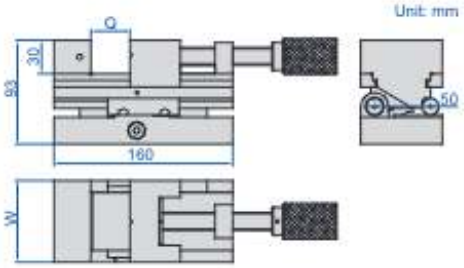

Code	Jaw opening (Q)	Jaw width (W)	Adjustable angle
6523-80	0-80mm	73mm	0-46°

16