SINE BAR

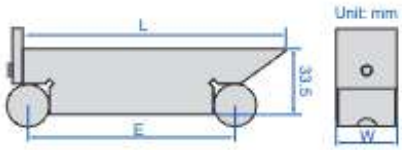



4158-100

- Made of alloy tool steel

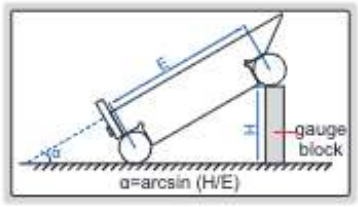

Code	Roller distance (E)	Table size (L×W)	Accuracy of α at 30°
4158-100	100mm	130×30mm	±5 seconds

SINE TABLE



6527-100

- Accuracy of angle: ±15 seconds
- Made of alloy tool steel
- Hardness HRC58-60

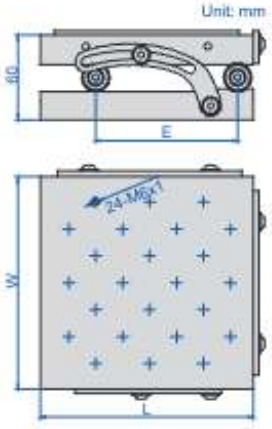

Code	Roller distance (E)	Table size (LxW)	Adjustable angle
6527-100	100mm	150×150mm	0-60°

COMPOUND SINE TABLE



6536-100

- Accuracy of angle: ±15 seconds
- Made of alloy tool steel
- Hardness HRC58-60

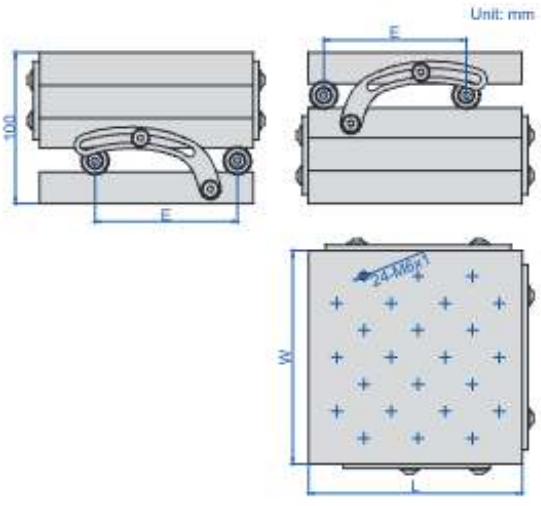

Code	Roller distance (E)	Table size (L×W)	Adjustable angle
6536-100	100mm	150×150mm	0-60°