## SINE BAR

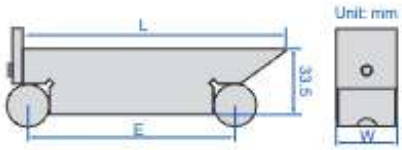




4158-100

- Made of alloy tool steel

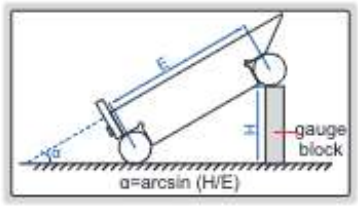


| Code | Roller distance (E) | Table size (L×W) | Accuracy of α at 30° |
|---|---|---|---|
| 4158-100 | 100mm | 130×30mm | ±5 seconds |

## SINE TABLE



6527-100

- Accuracy of angle: ±15 seconds
- Made of alloy tool steel
- Hardness HRC58-60

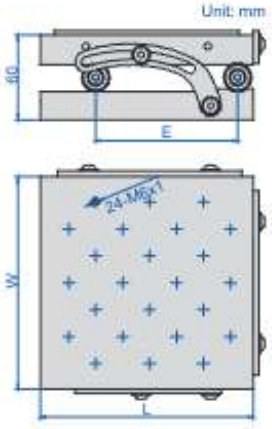


| Code | Roller distance (E) | Table size (LxW) | Adjustable angle |
|---|---|---|---|
| 6527-100 | 100mm | 150×150mm | 0-60° |

## COMPOUND SINE TABLE



6536-100

- Accuracy of angle: ±15 seconds
- Made of alloy tool steel
- Hardness HRC58-60

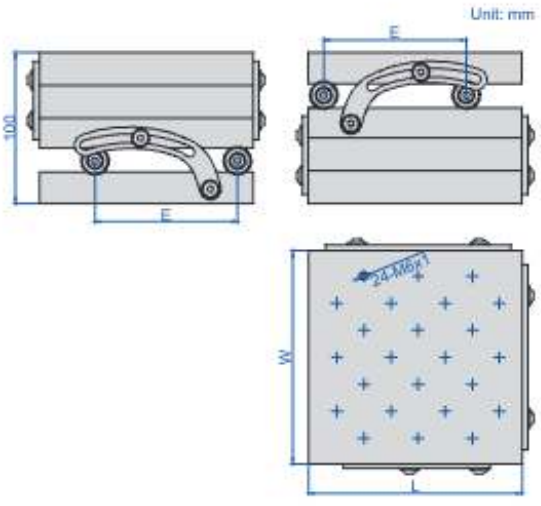


| Code | Roller distance (E) | Table size (L×W) | Adjustable angle |
|---|---|---|---|
| 6536-100 | 100mm | 150×150mm | 0-60° |