XY-AXIS STAGES



6584-401

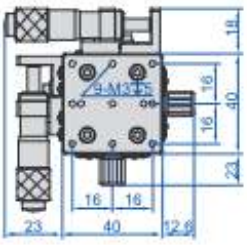



6584-602

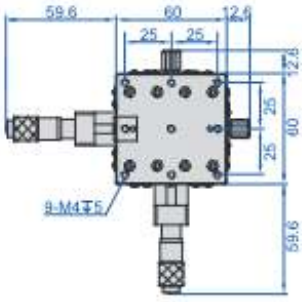



6584-903

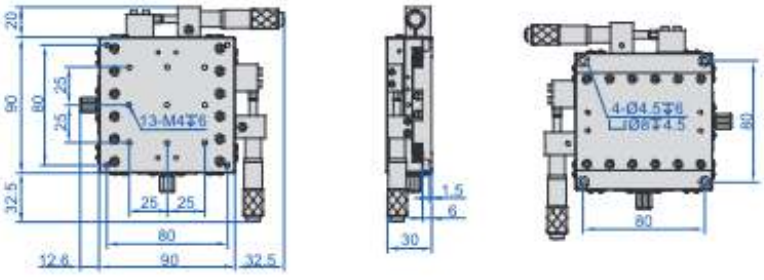

- Cross roller guides, achieve high precision and smooth movement
- Stages made of aluminum alloy

SPECIFICATION (micrometer on the left)

Code	XY-axis displacement	Parallelism of top to bottom surface	Micrometer graduation	Micrometer accuracy	Maximum load	Micrometer location	Stage size	Weight
6584-401	±6.5mm	0.04mm	0.01mm	0.01mm	29.4N (3kgf)	left	40x40mm	0.27kg
6584-601	±6.5mm	0.06mm	0.01mm	0.01mm	49N (5kgf)	left	60x60mm	0.48kg
6584-901	±12.5mm	0.06mm	0.01mm	0.02mm	93.1N (9.5kgf)	left	90x90mm	1kg
6584-1251	±12.5mm	0.08mm	0.01mm	0.02mm	180N (18.4kgf)	left	125x125mm	2.8kg

SPECIFICATION (micrometer in the middle)

Code	XY-axis displacement	Parallelism of top to bottom surface	Micrometer graduation	Micrometer accuracy	Maximum load	Micrometer location	Stage size	Weight
6584-402	±6.5mm	0.04mm	0.01mm	0.01mm	29.4N (3kgf)	middle	40x40mm	0.27kg
6584-602	±6.5mm	0.06mm	0.01mm	0.01mm	49N (5kgf)	middle	60x60mm	0.48kg
6584-902	±12.5mm	0.06mm	0.01mm	0.02mm	93.1N (9.5kgf)	middle	90x90mm	1kg
6584-1252	±12.5mm	0.08mm	0.01mm	0.02mm	180N (18.4kgf)	middle	125x125mm	2.8kg

SPECIFICATION (micrometer on the right)

Code	XY-axis displacement	Parallelism of top to bottom surface	Micrometer graduation	Micrometer accuracy	Maximum load	Micrometer location	Stage size	Weight
6584-403	±6.5mm	0.04mm	0.01mm	0.01mm	29.4N (3kgf)	right	40x40mm	0.27kg
6584-603	±6.5mm	0.06mm	0.01mm	0.01mm	49N (5kgf)	right	60x60mm	0.48kg
6584-903	±12.5mm	0.06mm	0.01mm	0.02mm	93.1N (9.5kgf)	right	90x90mm	1kg
6584-1253	±12.5mm	0.08mm	0.01mm	0.02mm	180N (18.4kgf)	right	125x125mm	2.8kg