MAGNETIC V-BLOCKS

ATTENTION: NOT SUITABLE FOR STEEL OR IRON SURFACES, OTHERWISE THE MAGNETIC FORCE WILL BE REDUCED

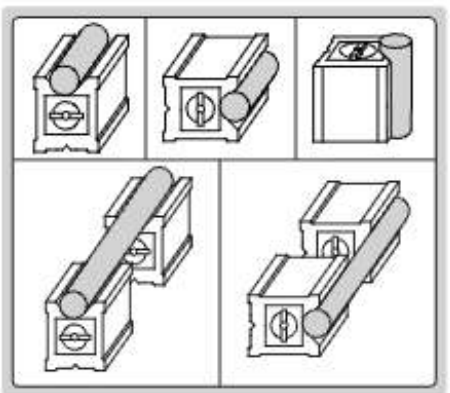



6801-1202



6801-2A

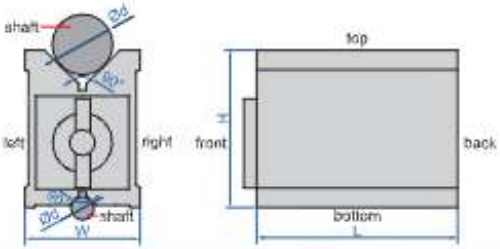

- Hold cylindrical workpieces for inspection and machining
- V groove on the top for large shafts
- V groove on the bottom for small shafts
- Not suitable for steel or iron surfaces, otherwise the magnetic force will be reduced

Individual

Code	Size (L×W×H)	Range of shafts (Ød)	Magnetic force	Parallelism of V grooves to top, bottom, left, right side	Squareness of V grooves to back side	Remark
6801-1201	80×70×95mm	6-67mm	64kgf	10μm	10μm	not hardened
6801-1202	100×70×95mm	6-67mm	80kgf	10μm	10μm	
6801-1203	120×70×95mm	6-67mm	96kgf	10μm	10μm	
6801-1201A	80×70×95mm	6-67mm	64kgf	10μm	10μm	hardened surfaces
6801-1202A	100×70×95mm	6-67mm	80kgf	10μm	10μm	
6801-1203A	120×70×95mm	6-67mm	96kgf	10μm	10μm	

Matched pair

Code	Size (L×W×H)	Range of shafts (Ød)	Magnetic force	Parallelism of V grooves to top, bottom, left, right side	Squareness of V grooves to back side	Height difference of a matched pair	Remark
6801-1	80×70×95mm	6-67mm	64kgf	10μm	10μm	10μm	not hardened
6801-2	100×70×95mm	6-67mm	80kgf	10μm	10μm	10μm	
6801-3	120×70×95mm	6-67mm	96kgf	10μm	10μm	10μm	
6801-1A	80×70×95mm	6-67mm	64kgf	10μm	10μm	10μm	hardened surfaces
6801-2A	100×70×95mm	6-67mm	80kgf	10μm	10μm	10μm	
6801-3A	120×70×95mm	6-67mm	96kgf	10μm	10μm	10μm	