DIAL INDICATOR STANDS



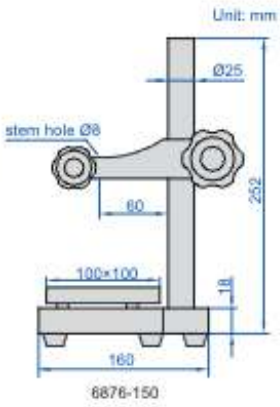



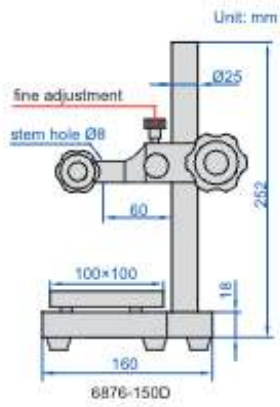

Code	Applicable holding stem	Anvil	Remark
6876-150	Ø8mm	ceramic, plain, flatness 1.5μm	without fine adjustment
6876-150D	Ø8mm	ceramic, plain, flatness 1.5μm	with fine adjustment, fine adjustment range 3mm

- Vertical travel of holder: 150mm
- Ceramic anvil
- Supplied with dust cover

GRANITE DIAL INDICATOR STANDS (BASIC TYPE)

POPULAR MODEL



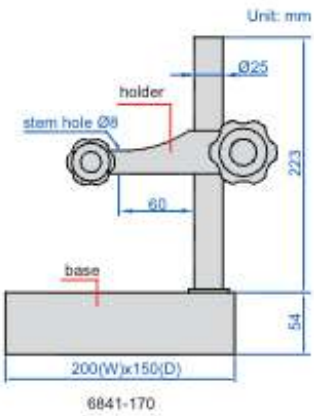



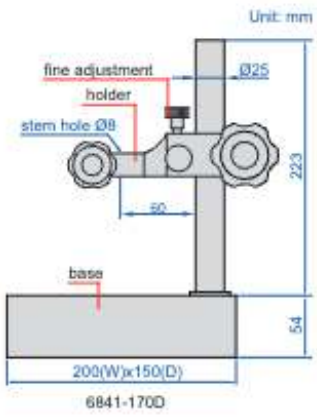

Code	Applicable holding stem	Base	Remark
6841-170	Ø8mm	flatness 2.5μm	without fine adjustment
6841-170D	Ø8mm	flatness 2.5μm	with fine adjustment, fine adjustment range 3mm

- Vertical travel of holder: 170mm
- Supplied with dust cover

10

GRANITE DIAL INDICATOR STAND

- Vertical travel of holder: 150mm
- Fine adjustment range: 2mm
- Supplied with dust cover



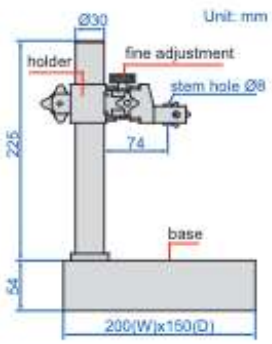

Code	Applicable holding stem	Base
6866-150	Ø8mm	flatness 2.5μm