DIAL INDICATOR STAND

GAUGE BLOCKS ARE NEEDED FOR ZERO SETTING



6846-140

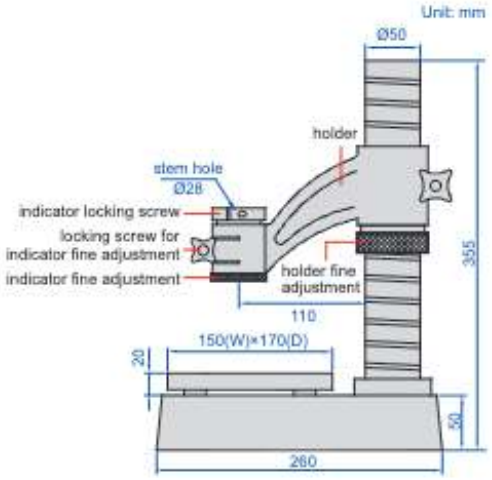

locating fork for workpieces (included)



- Vertical travel of holder: 140mm
- Holder fine adjustment range: entire stroke
- Indicator fine adjustment range: 3mm
- Optional accessory: Ø28mm/Ø8mm bush (code **6843-B8**), 0.001mm digital/dial indicators, high precision digital indicators (code **2140** series, **2150** series), gauge blocks (**4101** series, for zero setting)

Code	Applicable holding stem	Anvil
6846-140	Ø28mm	grid, flatness 1μm

Ø28mm/Ø8mm bush (optional)



Code
6843-B8

application

