OUTSIDE DIAMETER MEASURING STAND



6847-50

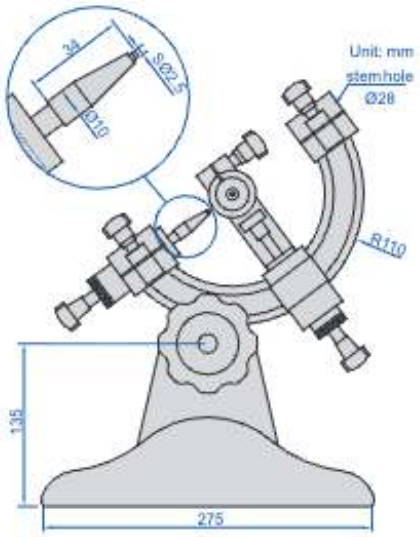

- To measure diameter and roundness of cylinders and steel balls
- Supplied with measuring base (code **6847-A100**)
- Optional accessory: Ø28mm/Ø8mm bush (code **6843-B8**), 0.001mm digital/dial indicators, high precision digital indicators (code **2140-6**, **2140-6WL**), gauge blocks (**4101** series, for zero setting of cylinders), custom plug gauges (for zero setting of cylinders), ceramic standard balls (**4190** series, for zero setting of steel balls)

Code	Range of outside diameter	Accuracy	Repeatability
6847-50	1.5-50mm/0.06-2"	±0.001mm	0.0005mm

Measuring base

Code	Diameter	Remark
6847-A10	10mm	optional
6847-A20	20mm	optional
6847-A30	30mm	optional
6847-A40	40mm	optional
6847-A50	50mm	optional
6847-A60	60mm	optional
6847-A70	70mm	optional
6847-A75	75mm	optional
6847-A80	80mm	optional
6847-A90	90mm	optional
6847-A100	100mm	included

Ø28mm/Ø8mm bush (optional)



Code
6843-B8

application

