GRANITE DIAL INDICATOR STANDS

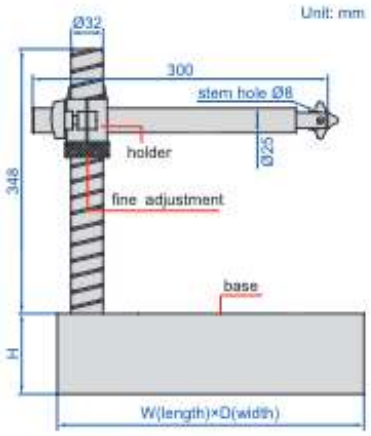



6867-250



6867-400

- Vertical travel of holder: 250mm
- Fine adjustment range: entire stroke
- Supplied with dust cover

Code	Applicable holding stem	W	D	H	Base
6867-250	Ø8mm	300mm	300mm	75mm	flatness 2.8μm
6867-400	Ø8mm	400mm	300mm	100mm	flatness 3μm

DIGITAL GROOVE MEASUREMENT STANDS

DATA OUTPUT

VIDEO

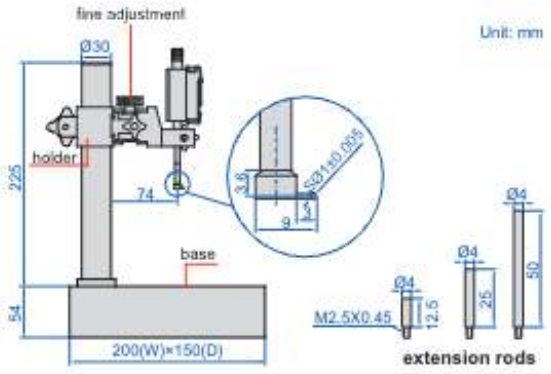



6870-150

- Button function: on/off, zero, mm/inch, measuring direction change, data preset, absolute/incremental measurement
- Vertical travel of holder: 150mm
- Fine adjustment range: 2mm
- CR2032 battery, automatic power off (time is adjustable)
- Data output
- Supplied with extension rods: 12.5mm (1pc), 25mm (1pc), 50mm (1pc)
- Supplied with groove point and dust cover
- Optional accessory:
  wireless transmitter code **7315-50M** (receiver is needed) page 8

measure width (b) and depth (a) of groove

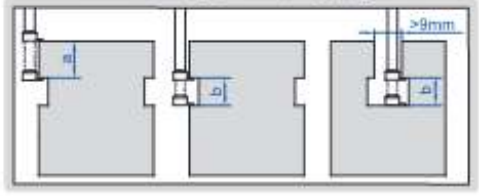

Code	Digital indicator stroke	Digital indicator resolution	Accuracy	Applicable holding stem	Base
6870-150	12.7mm/0.5"	0.01mm/0.0005"	±20μm	Ø8mm	flatness 2.5μm
6870-1501	12.7mm/0.5"	0.001mm/0.00005"	±5μm	Ø8mm	flatness 2.5μm