HEAVY DUTY DIAL INDICATOR STAND



6877-300

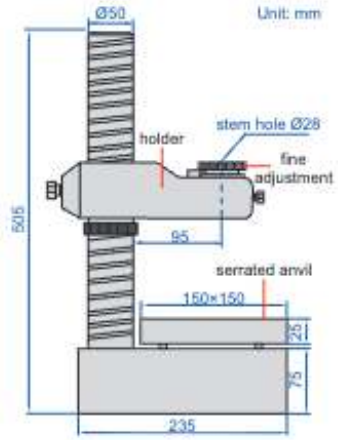

- Vertical travel of holder: 300mm
- Holder fine adjustment range: entire stroke
- Indicator fine adjustment range: 5mm
- Optional accessory: high precision digital indicators (code **2140** series, **2150** series), gauge blocks (**4101** series, for zero setting)

Code	Applicable holding stem	Anvil
6877-300	Ø28mm	steel (hardness HRC60±2), serrated, flatness 2μm

HEAVY DUTY DIAL INDICATOR STAND

VIDEO



6869-300

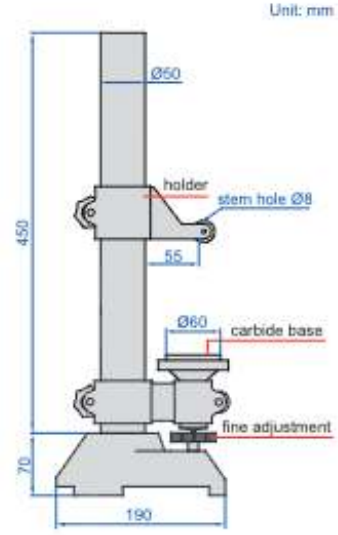

- Vertical travel of holder: 300mm
- Fine adjustment range: 5mm
- Carbide base
- Supplied with dust cover
- Optional accessory: holder with stem hole Ø28mm (code **6869-D28**)

Code	Applicable holding stem	Base
6869-300	Ø8mm	plain, flatness 1μm, carbide