GRANITE V-BLOCK SETS





6897-1

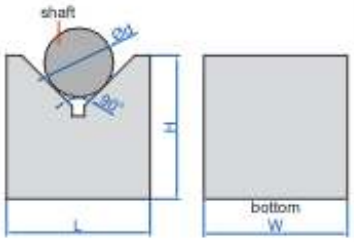

- Two V-blocks per set

Code	Size (L×W×H)	Range of shafts (Ød)	Parallelism of V groove to bottom	Height difference of a matchet pair
6897-1	70×50×70mm	6-70mm	4μm	5μm
6897-2	100×50×70mm	6-84mm	4μm	5μm

HARDENED SURFACES | HIGH PRECISION | STRONG MAGNETIC FORCE

MAGNETIC V-BLOCKS (ADVANCED TYPE)

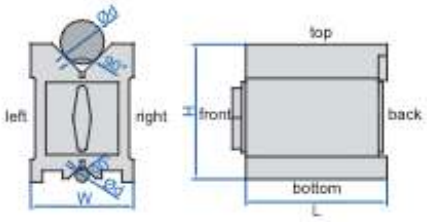



6889-11

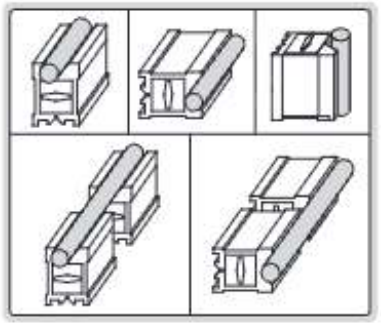



6889-1

- Hardened, high accuracy, strong magnetic force, for grinding, light milling, drilling and inspection of round and square workpieces
- All working surfaces are hardened to HRC60±2
- Magnetic force on top, bottom and two V grooves
- V groove on the top for large shafts
- V groove on the bottom for small shafts
- Suitable for cast iron surface plates and granite surface plates

Individual

Code	Size (L×W×H)	Range of shafts (Ød)	Magnetic force	Parallelism of V grooves to top, bottom, left, right sides	Squareness of V grooves to back side
6889-11	75×56×75mm	5-40mm	85kgf	5μm	5μm
6889-22	100×70×95mm	5-65mm	150kgf	5μm	5μm
6889-33	150×75×100mm	5-70mm	190kgf	6μm	6μm
6889-55	160×125×130mm	5-140mm	220kgf	12μm	12μm
6889-44	200×125×150mm	10-140mm	400kgf	12μm	12μm

Matched pair

Code	Size (L×W×H)	Range of shafts (Ød)	Magnetic force	Parallelism of V grooves to top, bottom, left, right sides	Squareness of V grooves to back side	Height difference of a matched pair
6889-1	75×56×75mm	5-40mm	85kgf	5μm	5μm	5μm
6889-2	100×70×95mm	5-65mm	150kgf	5μm	5μm	5μm
6889-3	150×75×100mm	5-70mm	190kgf	6μm	6μm	6μm
6889-5	160×125×130mm	5-140mm	220kgf	12μm	12μm	12μm
6889-4	200×125×150mm	10-140mm	400kgf	12μm	12μm	12μm