GRANITE SURFACE PLATES

CUSTOM-MADE
SUPPLY SPECIAL SIZES ACCORDING TO CUSTOMER'S REQUEST

INSPECTION CERTIFICATE

- Made of Indian granite, high hardness, free from deterioration or dimensional change over time, minimal changes in dimension due to temperature changes
- Meet DIN876, grade 00 is for inspection room or lab, grade 0 is for workshop
- Optional accessory:
  stand for granite surface plate (code **6902**),
  jack for granite surface plate (code **6903-B**)



6900-132

Physical characteristics of granite

Shore hardness	94HS
Flexural strength	28MPa
Compressive strength	236MPa
Elastic modulus	9.88×10^{4}MPa
Poisson's ratio	0.33
Volume density	3000kg/m³
Water absorption rate	0.05%
Linear expansion coefficient	6×10^{-6}/°C

Grade 00

Code	Size (L×W×H)	Flatness	Weight	Max. load
6900-132*	300×200×60mm	2.7μm	11kg	30kg
6900-142*	400×250×60mm	2.9μm	18kg	50kg
6900-144*	400×400×60mm	3.1μm	29kg	60kg
6900-153*	500×315×70mm	3.2μm	33kg	60kg
6900-164*	630×400×80mm	3.5μm	60kg	65kg
6900-166*	630×630×100mm	3.8μm	119kg	75kg
6900-185*	800×500×100mm	3.9μm	120kg	100kg
6900-1106*	1000×630×140mm	4.4μm	265kg	200kg
6900-1107*	1000×750×150mm	4.5μm	337kg	300kg
6900-1101*	1000×1000×150mm	4.8μm	450kg	400kg
6900-1128*	1200×800×160mm	4.9μm	461kg	500kg
6900-1161*	1600×1000×180mm	5.8μm	864kg	600kg
6900-1201*	2000×1000×220mm	6.5μm	1320kg	650kg
6900-1202*	2000×1500×250mm	7.0μm	2250kg	750kg



Grade 0

Code	Size (L×W×H)	Flatness	Weight	Max. load
6900-032*	300×200×60mm	5.4μm	11kg	60kg
6900-042*	400×250×60mm	5.9μm	18kg	100kg
6900-044*	400×400×60mm	6.3μm	29kg	120kg
6900-053*	500×315×70mm	6.4μm	33kg	120kg
6900-064*	630×400×80mm	7.0μm	60kg	130kg
6900-066*	630×630×100mm	7.6μm	119kg	150kg
6900-085*	800×500×100mm	7.8μm	120kg	200kg
6900-0106*	1000×630×140mm	8.7μm	265kg	400kg
6900-0107*	1000×750×150mm	9.0μm	337kg	600kg
6900-0101*	1000×1000×150mm	9.7μm	450kg	800kg
6900-0128*	1200×800×160mm	9.8μm	461kg	1000kg
6900-0161*	1600×1000×180mm	11.5μm	864kg	1200kg
6900-0201*	2000×1000×220mm	12.9μm	1320kg	1300kg
6900-0202*	2000×1500×250mm	14.0μm	2250kg	1500kg

*Supplied with manufacturer inspection certificate

STANDS FOR GRANITE SURFACE PLATES

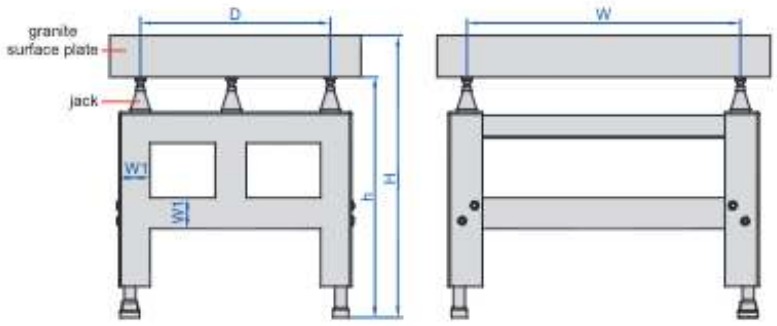



6902-64A

- For medium size granite surface plates
- 5 jacks are included
- Adjusting range of jacks: 25mm
- One foot on the bottom is adjustable

Low stands (mm)

Code	For granite surface plate	W	D	H (with granite surface plate)	h (without granite surface plate)	W1
6902-64A	630×400×80mm (code **6900-064** and **6900-164**)	352	224	775-800	695-720	80
6902-66A	630×630×100mm (code **6900-066** and **6900-166**)	352	352	775-800	675-700	80
6902-85A	800×500×100mm (code **6900-085** and **6900-185**)	448	280	775-800	675-700	80
6902-106A	1000×630×140mm (code **6900-0106** and **6900-1106**)	560	352	755-780	615-640	80
6902-107A	1000×750×150mm (code **6900-0107** and **6900-1107**)	560	420	755-780	605-630	80
6902-101A	1000×1000×150mm (code **6900-0101** and **6900-1101**)	560	560	755-780	605-630	80
6902-128A	1200×800×160mm (code **6900-0128** and **6900-1128**)	672	448	755-780	595-620	80
6902-161A	1600×1000×180mm (code **6900-0161** and **6900-1161**)	896	560	755-780	575-600	100
6902-201A	2000×1000×220mm (code **6900-0201** and **6900-1201**)	1120	560	755-780	535-560	100
6902-202A	2000×1500×250mm (code **6900-0202** and **6900-1202**)	1120	840	755-780	505-530	100

High stands (mm)

Code	For granite surface plate	W	D	H (with granite surface plate)	h (without granite surface plate)	W1
6902-64H	630×400×80mm (code **6900-064** and **6900-164**)	352	224	1000-1025	920-945	80
6902-66H	630×630×100mm (code **6900-066** and **6900-166**)	352	352	1000-1025	900-925	80
6902-85H	800×500×100mm (code **6900-085** and **6900-185**)	448	280	1000-1025	900-925	80
6902-106H	1000×630×140mm (code **6900-0106** and **6900-1106**)	560	352	1000-1025	860-885	80
6902-107H	1000×750×150mm (code **6900-0107** and **6900-1107**)	560	420	1000-1025	850-875	80
6902-101H	1000×1000×150mm (code **6900-0101** and **6900-1101**)	560	560	1000-1025	850-875	80
6902-128H	1200×800×160mm (code **6900-0128** and **6900-1128**)	672	448	1000-1025	840-865	80
6902-161H	1600×1000×180mm (code **6900-0161** and **6900-1161**)	896	560	1000-1025	820-845	100
6902-201H	2000×1000×220mm (code **6900-0201** and **6900-1201**)	1120	560	1000-1025	780-805	100
6902-202H	2000×1500×250mm (code **6900-0202** and **6900-1202**)	1120	840	1000-1025	750-775	100

JACK SET FOR GRANITE SURFACE PLATES

- 5 jacks per set
- Adjustable height
- For large granite surface plates:
  2000×1000×220mm
  (code **6900-0201** and **6900-1201**)
  2000×1500×250mm
  (code **6900-0202** and **6900-1202**)

Code
6903-B



6903-B

