# DIGITAL VERTICAL SCALES

DATA OUTPUT



7102-300

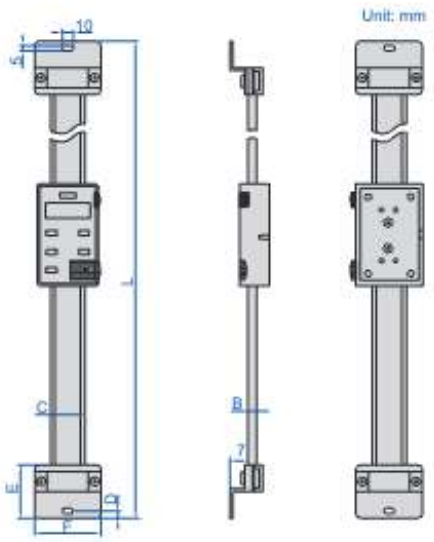




- Non waterproof
- Resolution: 0.01mm/0.0005"
- Buttons: on/off, zero, mm/inch, ABS/INC, data hold, TOL, set
- Battery LR44, data output
- Made of stainless steel
- Supplied with bracket to be mounted on the back
- Optional accessory: wireless transmitter code **7315-1150** (receiver is needed) page 10

example of application

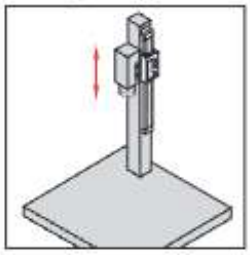

(mm)

| Code | Range | Accuracy | B | C | D | E | F | L |
|---|---|---|---|---|---|---|---|---|
| 7102-100 | 100mm/4" | ±0.02mm | 4 | 20 | 6 | 24 | 40 | 245 |
| 7102-150 | 150mm/6" | ±0.03mm | 4 | 20 | 6 | 24 | 40 | 296 |
| 7102-200 | 200mm/8" | ±0.03mm | 4 | 20 | 6 | 24 | 40 | 345 |
| 7102-300 | 300mm/12" | ±0.04mm | 4 | 20 | 6 | 24 | 40 | 445 |
| 7102-400 | 400mm/16" | ±0.05mm | 4 | 20 | 6 | 24 | 40 | 545 |
| 7102-500 | 500mm/20" | ±0.05mm | 5.5 | 24 | 8 | 32 | 45 | 685 |
| 7102-600 | 600mm/24" | ±0.08mm | 5.5 | 24 | 8 | 32 | 45 | 785 |
| 7102-800 | 800mm/32" | ±0.10mm | 5.5 | 24 | 8 | 32 | 45 | 985 |
| 7102-1000 | 1000mm/40" | ±0.10mm | 10.5 | 31 | 9.5 | 40 | 60 | 1245 |

