INSIDE CALIPERS

- Made of carbon steel



7240-150

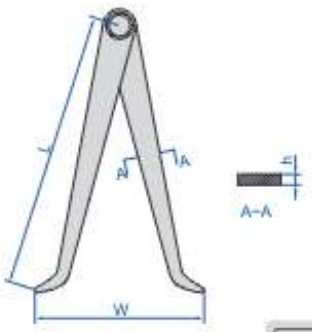

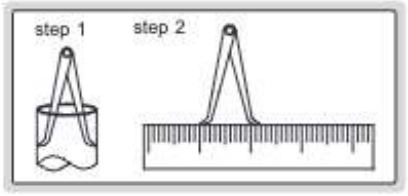

Code	Size (L)	Range (W)	h
7240-150	150mm	17-150mm	2mm
7240-200	200mm	17-200mm	3mm
7240-300	300mm	18-300mm	3mm

OUTSIDE CALIPERS

- Made of carbon steel



7241-150

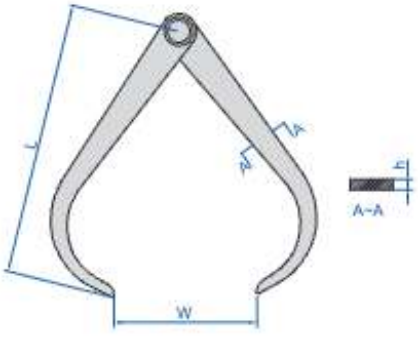

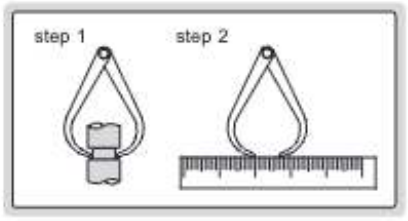

Code	Size (L)	Range (W)	h
7241-150	150mm	0-150mm	2mm
7241-200	200mm	0-200mm	3mm
7241-300	300mm	0-300mm	3mm

INSIDE SPRING CALIPERS



- Made of carbon steel



7261-150

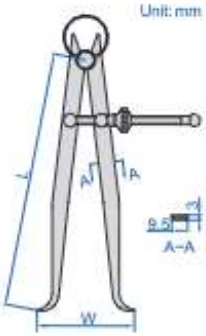

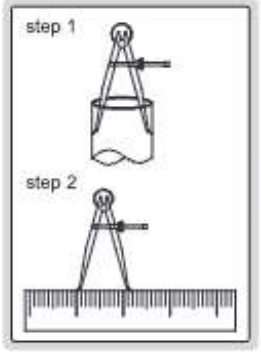

Code	Size (L)	Range (W)
7261-150	150mm	20-150mm
7261-200	200mm	22-200mm
7261-250	245mm	30-250mm
7261-300	300mm	30-300mm