SHAFT SLEEVE



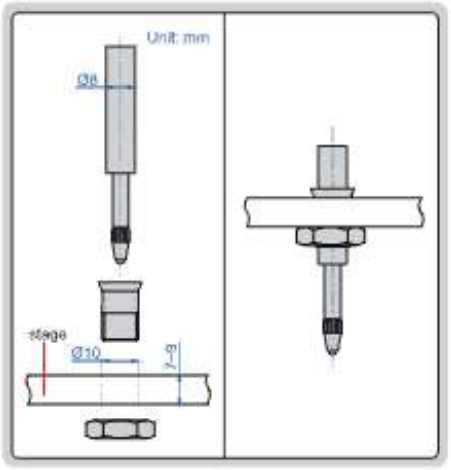



7333

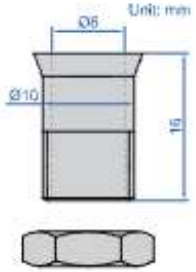

- For dial indicators and probes with shaft diameter Ø8mm

Code
7333