WEIGHING SCALES (OIML CERTIFICATE)

- LCD display, with backlight
- Zero-setting, subtracting tare value
- Overload alarm
- Automatic power off
- OIML certificate (No. 0200-NAWI-04601)



8002-30M

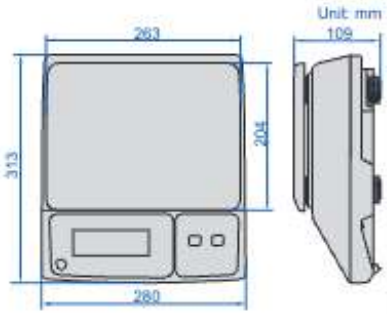

SPECIFICATION

Code	8002-6M	8002-15M	8002-30M	8002-6MD	8002-15MD	8002-30MD
Maximum weighing	3/6kg	6/15kg	15/30kg	3/6kg	6/15kg	15/30kg
Minimum weighing	20g	40g	100g	20g	40g	100g
Resolution (d)	1/2g	2/5g	5/10g	1/2g	2/5g	5/10g
Verification interval (e)	2g	5g	10g	2g	5g	10g
Accuracy (m is load)	m≤3kg: ±1g 3kg<m≤6kg: ±2g	m≤6kg: ±2g 6kg<m≤15kg: ±5g	m≤15kg: ±5g 15kg<m≤30kg: ±10g	m≤3kg: ±1g 3kg<m≤6kg: ±2g	m≤6kg: ±2g 6kg<m≤15kg: ±5g	m≤15kg: ±5g 15kg<m≤30kg: ±10g
Output	no			RS232		
Operation temperature	-10~40°C					
Power supply	rechargeable battery (6V/3.2Ah), power adapter (12V/500mA)					
Dimensions of pan	263×204mm					

WEIGHING SCALES (HIGH ACCURACY)



printer (**optional**)

- LCD display, with backlight
- Zero-setting, subtracting tare value
- Overload alarm
- Automatic power off



8001-6

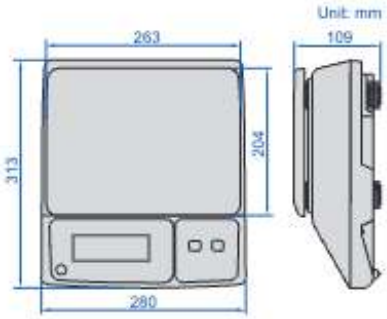

SPECIFICATION

Code	8001-6	8001-15	8001-30	8001-6D	8001-15D	8001-30D
Maximum weighing	6kg	15kg	30kg	6kg	15kg	30kg
Minimum weighing	4g	10g	20g	4g	10g	20g
Resolution (d)	0.2g	0.5g	1g	0.2g	0.5g	1g
Accuracy (m is load)	m≤1kg: ±1g 1kg<m≤4kg: ±2g m>4kg: ±3g	m≤2.5kg: ±2.5g 2.5kg<m≤10kg: ±5g m>10kg: ±7.5g	m≤5kg: ±5g 5kg<m≤20kg: ±10g m>20kg: ±15g	m≤1kg: ±1g 1kg<m≤4kg: ±2g m>4kg: ±3g	m≤2.5kg: ±2.5g 2.5kg<m≤10kg: ±5g m>10kg: ±7.5g	m≤5kg: ±5g 5kg<m≤20kg: ±10g m>20kg: ±15g
Units	kg, lb			kg		
Output	no			RS232		
Operation temperature	-10~40°C					
Power supply	rechargeable lead acid battery (6V/3.2Ah)					
Dimensions of pan	263×204mm					

OPTIONAL ACCESSORY (for scales with RS232)

Printer	8001-PRINTER
Data output cable (keyboard format)	7302-8001
Wireless transmitter (receiver is needed)	7315-8001