DATA OUTPUT | BUILT-IN BLUETOOTH

ATTENTION: LOW ACCURACY

BLUETOOTH FOLDING SCALE
CODE 8605-60



8605-60

- Zero-setting, weighing, subtracting tare value
- Voice to report the result
- Unit: kg, g
- Overload alarm

Unit: mm

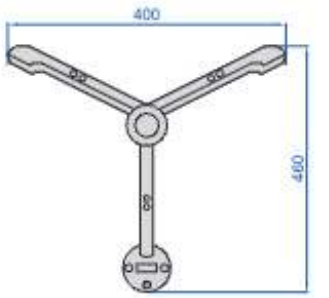

SPECIFICATION

Maximum weighing	60kg
Minimum weighing	400g
Resolution (d)	20g
Accuracy (m is load)	±40g
Operation temperature	-10~40°C
Operation humidity	20~90%RH
Power supply	3.7V rechargeable Li-ion battery
Output	bluetooth



foldable and portable

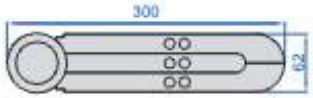

DATA OUTPUT | CAN BE CUSTOMIZED

PLATFORM SCALES



alarm light (**optional**)

Unit: mm

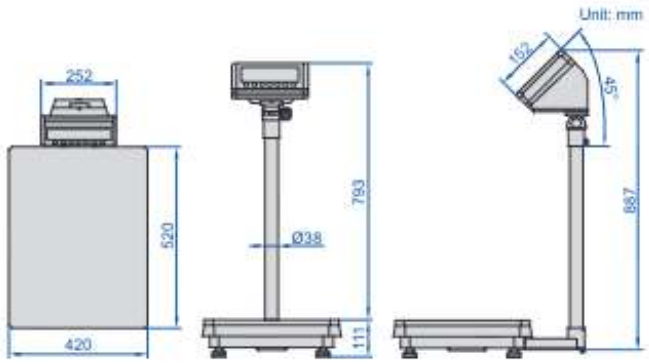



8501-AL150

- LCD large screen display with LED backlight
- Weighing, overweight alarm, counting, keyboard lock, accumulating, auto zero and animal scale
- Unit: kg, g, lb, oz



printer (**optional**)

SPECIFICATION

Code	8501-AL60	8501-AL150	8501-AL300
Maximum weighing	60kg	150kg	300kg
Minimum weighing	100g	200g	400g
Resolution (d)	5g	10g	20g
Accuracy	±10g	±20g	±30g
Operation temperature	-10~40°C		
Material	platform: stainless steel, base: die-cast aluminum		
Dimension of platform	420×520mm		
Power supply	rechargeable lead acid battery (6V/4Ah)		
Output	RS232		
Weight	18.3kg		

OPTIONAL ACCESSORY

Printer	8001-PRINTER
Alarm light	8001-ALARM
Data output cable (keyboard format)	7302-8001
Wireless transmitter (receiver is needed)	7315-8001