Digimatic V-Anvil Micrometers

Functions	Series 314
Data output	●
ABS / INC (INC ZERO)	●
Auto Power OFF after 20 min. non use	●
Low voltage alarm	●
Function lock	●
HOLD	●
2 x PRESET	●

Specifications

Display	LCD, character height 7,5 mm
Measuring face	Prism angle 60°
Measuring spindle	With spindle lock, ø 6,35 mm, spindle pitch 0,75 mm
Scale	Thimble and sleeve satin chrome finish
Power supply	1 battery SR-44
Battery life	Approx. 2,4 years
Delivered	Including box, setting standard, key, 1 battery

Optional accessories

No.	Description
05CZA662	Digimatic Cable with Data Button IP Type, 1 m, Micrometer Type
05CZA663	Digimatic Cable with Data Button IP Type, 2 m, Micrometer Type
06AFM380B	USB Input Tool Direct (Digimatic to USB), 2m Cable, Digimatic/Digimatic 2, with Data Button IP Micrometer Type
264-622	U-WAVE fit, IP67 Type, Wireless Transmitter for Micrometer/Indicator
264-623	U-WAVE fit, Buzzer Type, Wireless Transmitter for Micrometer/Indicator
264-626	U-WAVE fit Bluetooth, IP67 Type, Wireless Transmitter for Micrometer/Indicator
264-627	U-WAVE fit Bluetooth, Buzzer Type, Wireless Transmitter for Micrometer/Indicator
02AZF310	Connection Unit for IP Caliper, Micrometer, with Data Button for U-WAVE fit, U-WAVE fit Bluetooth

Consumable spares

No.	Description
63AAA800	Battery SR44 1,5 V



Series 314

This Digimatic V-Anvil Micrometer helps you to measure cutting tools and taps.
It offers the following benefits:

- It measures the outside diameter of cutting tools (such as taps, reamers, end mills) which have three flutes.
- V-anvils with a centreline groove are available for measuring the pitch diameter of taps by the single-wire method.



314-251-30

Metric

No.	Range [mm]	Digital step	Max. Permissible Error E MPE	Flatness	Anvil	Measuring force [N]	Setting standard	Mass [g]
314-251-30	1–15	0,001 mm	±4 µm	0,3 µm (spindle), 1 µm (anvil)	With groove	3-8	167-327 ø 5 mm	275
314-261-30	1–15	0,001 mm	±4 µm	0,3 µm (spindle), 1 µm (anvil)	Without groove	3-8	167-327 ø 5 mm	275
314-252-30	10–25	0,001 mm	±4 µm	0,3 µm (spindle), 1 µm (anvil)	With groove	5-10	167-328 ø 10 mm	410
314-262-30	10–25	0,001 mm	±4 µm	0,3 µm (spindle), 1 µm (anvil)	Without groove	5-10	167-328 ø 10 mm	410
314-253-30	25–40	0,001 mm	±5 µm	0,3 µm (spindle), 1 µm (anvil)	Without groove	5-10	167-329 ø 25 mm	465

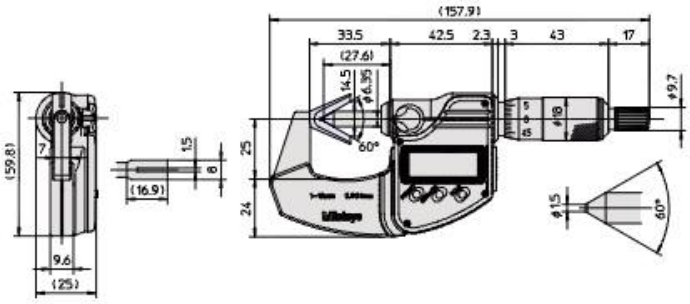

1 - 15 mm

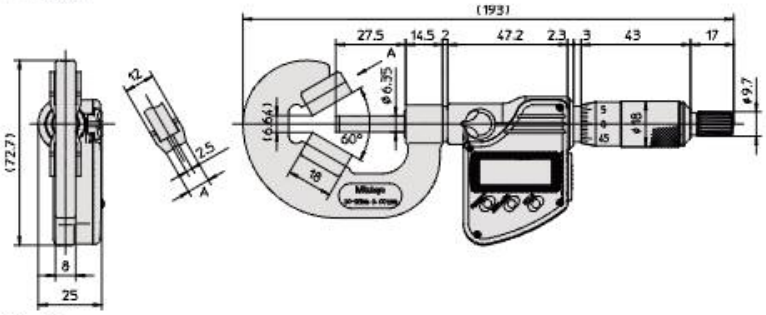

10 - 25 mm

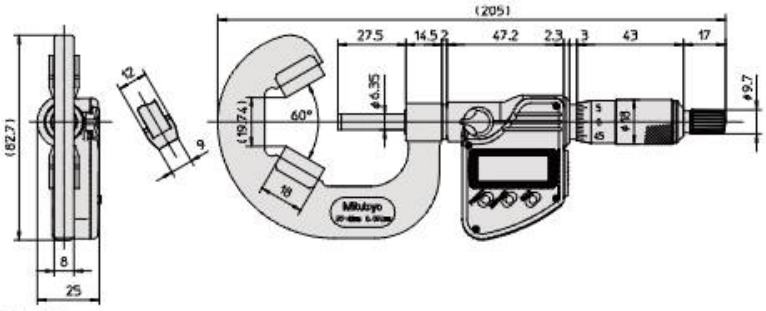

25 - 40 mm

All products to be sold to commercial customers.
Product illustrations are without obligation. Product descriptions, in particular any and all technical specifications, are only binding when explicitly agreed upon.

Mitutoyo

V-Anvil Micrometers

Series 114

This V-Anvil Micrometer helps you measure cutting tools and taps.
It offers the following benefits:

- It measures the outside diameter of cutting tools (such as taps, reamers, end mills) which have three or five flutes.
- V-anvils with a centreline groove are available for measuring the pitch diameter of taps by the single-wire method.



114-204



114-121

Metric For 3-flute cutting tools (60°)

No.	Range [mm]	Graduation	Max. Permissible Error E MPE	Flatness	Anvil	Measuring force [N]	Setting standard	a [mm]	Mass [g]
114-101	1–15	0,01 mm	±4 µm	0,6 µm (spindle), 1,3 µm (anvil)	With groove	5-10	167-327 ø 5 mm	0,5	120
114-161	1–15	0,01 mm	±4 µm	0,6 µm (spindle), 1,3 µm (anvil)	Without groove	5-10	167-327 ø 5 mm	0,5	120
114-204	2,3–25	0,01 mm	±4 µm	0,6 µm (spindle), 1,3 µm (anvil)	Without groove	5-10	167-327 ø 5 mm	0,5	290
114-102	10–25	0,01 mm	±4 µm	0,6 µm (spindle), 1,3 µm (anvil)	With groove	5-10	167-328 ø 10 mm	6,2	280
114-162	10–25	0,01 mm	±4 µm	0,6 µm (spindle), 1,3 µm (anvil)	Without groove	5-10	167-328 ø 10 mm	6,2	280
114-103	25–40	0,01 mm	±5 µm	0,6 µm (spindle), 1,3 µm (anvil)	Without groove	5-10	167-329 ø 25 mm	19,14	400
114-104	40–55	0,01 mm	±6 µm	0,6 µm (spindle), 1,3 µm (anvil)	Without groove	5-10	167-330 ø 40 mm	32,13	465
114-105	55–70	0,01 mm	±6 µm	0,6 µm (spindle), 1,3 µm (anvil)	Without groove	5-10	167-331 ø 55 mm	45,12	675
114-106	70–85	0,01 mm	±7 µm	0,6 µm (spindle), 1,3 µm (anvil)	Without groove	5-10	167-332 ø 70 mm	58,11	910
114-107	85–100	0,01 mm	±7 µm	0,6 µm (spindle), 1,3 µm (anvil)	Without groove	5-10	167-333 ø 85 mm	71,1	1160
114-108	100–115	0,01 mm	±8 µm	0,6 µm (spindle), 1,3 µm (anvil)	Without groove	5-10	167-334 ø 100 mm	84,1	1480
114-109	115–130	0,01 mm	±8 µm	0,6 µm (spindle), 1,3 µm (anvil)	Without groove	5-10	167-335 ø 115 mm	97,09	2080
114-110	130–145	0,01 mm	±9 µm	0,6 µm (spindle), 1,3 µm (anvil)	Without groove	5-10	167-336 ø 130 mm	110,1	2880

Metric For 5-flute cutting tools (108°)

No.	Range [mm]	Graduation	Max. Permissible Error E MPE	Flatness	Anvil	Measuring force [N]	Setting standard	Mass [g]
114-137	2,3–25	0,01 mm	±4 µm	0,6 µm (spindle), 1,3 µm (anvil)	Without groove	5-10	167-327 ø 5 mm	220
114-121	5–25	0,01 mm	±4 µm	0,6 µm (spindle), 1,3 µm (anvil)	With groove	5-10	167-327 ø 5 mm	255
114-165	5–25	0,01 mm	±4 µm	0,6 µm (spindle), 1,3 µm (anvil)	Without groove	5-10	167-327 ø 5 mm	255
114-122	25–45	0,01 mm	±5 µm	0,6 µm (spindle), 1,3 µm (anvil)	Without groove	5-10	167-329 ø 25 mm	400
114-123	45–65	0,01 mm	±6 µm	0,6 µm (spindle), 1,3 µm (anvil)	Without groove	5-10	167-331 ø 55 mm	540
114-124	65–85	0,01 mm	±7 µm	0,6 µm (spindle), 1,3 µm (anvil)	Without groove	5-10	167-332 ø 70 mm	760

Specifications

Measuring face	Prism angle 60°/108°, carbide tipped spindle hardened anvil (114-204, 114-137 carbide tipped anvil/spindle)
Measuring spindle	With spindle lock, ø6,35 mm, spindle pitch 0,75 mm
Scale	Thimble and sleeve satin chrome finish ø18 mm
Delivered	Including box, setting standard, key

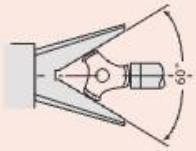

For 3-flute cutting tools

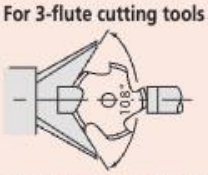

For 5-flute cutting tools

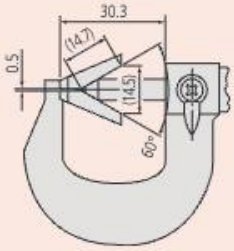

114-101, 114-161

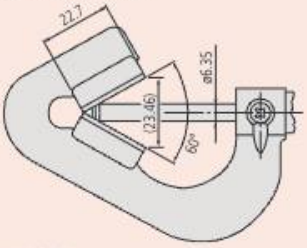

114-204

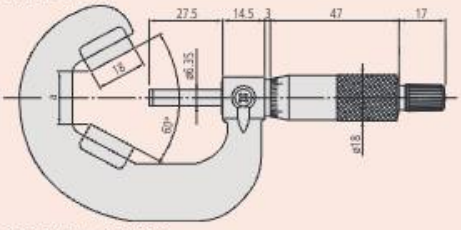

114-102 to 114-110

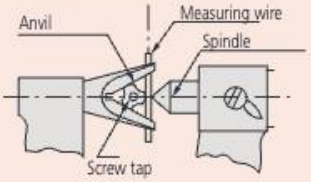

For 114-101, 114-102, 114-121

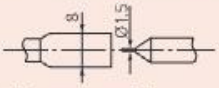

Plain anvil model

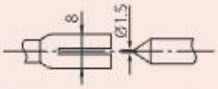

Grooved anvil model

All products to be sold to commercial customers.
Product illustrations are without obligation. Product descriptions, in particular any and all technical specifications, are only binding when explicitly agreed upon.