Vertical Digital Scale

Description

- Used for displacement measurment worktable and lathe postioning etc
- Made of stainless steel
- Both ends with fixed black holder
- Zero setting at any position, ABS/REL convenient
- Data hold, preset and TOL setting
- With TOL setting
- 3V battery CR2032
- Delivery with holder installed on the back of the frame

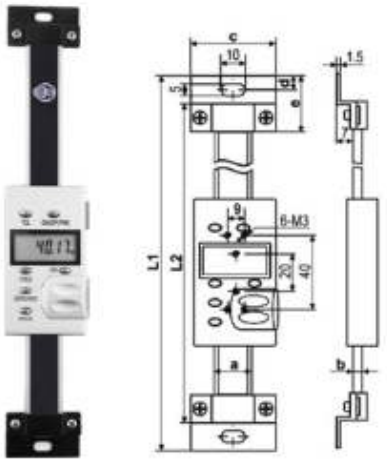

Overall dimension(mm)

Range	L1	L2	a	b	c	d	e
100 mm	244	220	20	4	40	6	24
150 mm	294	270	20	4	40	6	24
200 mm	344	320	20	4	40	6	24
300 mm	444	420	20	4	40	6	24
500 mm	664	640	24	5.5	45	8	32
600 mm	782	750	24	5.5	45	8	32
1000 mm	1240	1200	24	10.5	60	10	40

Art.No.	Range	Reading	Indication Error	Barcode
4500-100E	100 mm	0.01mm	0.03mm	6976367672935
4500-150E	150 mm	0.01mm	0.03mm	6976367672942
4500-200E	200 mm	0.01mm	0.03mm	6976367672959
4500-300E	300 mm	0.01mm	0.04mm	6976367672966
4500-500E	500 mm	0.01mm	0.05mm	6976367672973
4500-600E	600 mm	0.01mm	0.05mm	6976367672980
4500-1000E	1000 mm	0.01mm	0.07mm	6976367672997

Digital Gear Tooth Caliper



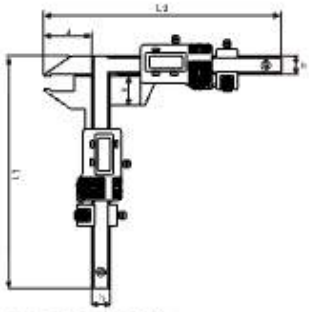

Description

- Stainless steel, hardened
- For measuring gear thickness
- With mm/inch, ON/OFF and zero buttons
- Hardened jaw tips
- Deliver in wooden box with 1.5V battery

Overall Dimension(mm)

Range	a	b	h	L1	L2
m1-25	30.5	21	16	170	165
m5-50	55	50.5	16	220	190

Art No.	Range	Reading	Accuracy Error	Barcode
214-8739	m1-25	0.01mm/0.0005"	±0.04mm	6971570718739
214-8746	m5-50	0.01mm/0.0005"	±0.04mm	6971570718746