Digital Indicator



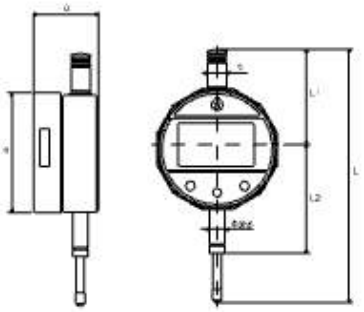

Description

- Large display for easy reading
- Scale with glass rail for precision sampling
- Stem ø8mm h6
- With buttons: in/mm, ABS and ZERO/ON
- Preset function
- With data output, Flat back
- Packed in plastic box with 3V CR2032 battery
- Deliver with certificate

Overall Dimension(mm)

Range	L	a	b	L1	L2
0-12.7mm	125	57.4	32.4	47.7	51.5
0-25.4mm	183	57.4	34.7	68	76
0-50.8mm	247	57.4	34.7	91	99

Art No.	Range	Reading	Barcode
221-9095	0-12.7mm/0-0.5"	0.01mm/0.0005"	6971570719095
221-9101	0-25.4mm/0-1"	0.01mm/0.0005"	6971570719101
221-9118	0-50.8mm/0-2"	0.01mm/0.0005"	6971570719118
221-9125	0-12.7mm/0-0.5"	0.001mm/0.00005"	6971570719125
221-9132	0-25.4mm/0-1"	0.001mm/0.00005"	6971570719132
221-9149	0-50.8mm/0-2"	0.001mm/0.00005"	6971570719149

Digital Indicator



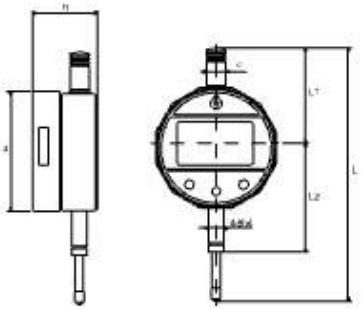

Description

- Large display for easy reading
- Scale with glass rail for precision sampling
- Stem ø8mm h6, With analog pointer
- Tolerance range setting, deviation judgement
- Max and Min data can be searched and stored
- Metric and inch conversion, With USB data output
- Absolute and relative measurement, data preset
- With USB data output
- Buttons: in/mm, ABS, ZERO/ON, T, M
- Packed in plastic box with 3V CR2032 battery
- Flat back, Deliver with certificate

Overall Dimension(mm)

Range	L	a	b	L1	L2
0-12.7mm	125	57.4	32.4	47.7	51.5
0-25.4mm	183	57.4	34.7	68	76
0-50.8mm	247	57.4	34.7	91	99

Art No.	Range	Reading	Barcode
221-9156	0-12.7mm/0-0.5"	0.01mm/0.0005"	6971570719156
221-9163	0-25.4mm/0-1"	0.01mm/0.0005"	6971570719163
221-9170	0-50.8mm/0-2"	0.01mm/0.0005"	6971570719170
221-9187	0-12.7mm/0-0.5"	0.001mm/0.00005"	6971570719187
221-9194	0-25.4mm/0-1"	0.001mm/0.00005"	6971570719194
221-9200	0-50.8mm/0-2"	0.001mm/0.00005"	6971570719200