Precision Comparator Stand



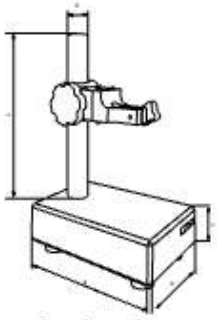

Description

- Measuring surface fine ground and diamond lapped
- Precision clamp with fine adjustment, range 1-1.2mm
- With φ8mm and 3/8" clamping hole
- Natural granite base,Packed in cardbox

Overall Dimension(mm)

Range	L	a	b	c	d
150x100mm	180	150	100	40	25
210x150mm	180	210	150	50	25

Art No.	Working Table	Flatness Of Wrking Table	Thickness of the base	Barcode
7132-G150	150x100mm	2.0μm	40mm	6972727951986
7132-G210	210x150mm	2.5μm	50mm	6972727951993

Granite Precision Measuring Table



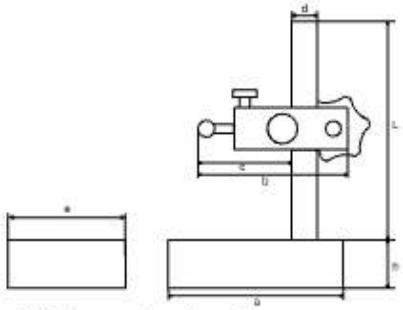

Description

- Natural granite table
- Finely ground measuring surface according to DIN876/00 Class
- Precise tuning device, adjustable 8mm travel
- Dial clamping hole:8mm
- Connecting thread: M8×1.25,Packaging: Carton

Overall Dimension(mm)

Range	L	a	b	c	d	e	h
150x100x40mm	180	150	121	64	22	100	40
200x150x50mm	250	200	130	80	30	150	50
300x200x50mm	300	300	152.5	97.5	35	200	50

Art No.	Size	Barcode
7132-GF150	150x100x40mm	6972727957933
7132-GF200	200x150x50mm	6972727957940
7132-GF300	300x200x50mm	6972727957957