Digital Zero Setting Gauge



Description

- Used for zero setting
- LCD large display for easy reading
- Two buttons, mm/inch, ZERO
- 1.5V battery

Art.No.	Range	Reading	Height	Accuracy error	Barcode
7413-20E	0-2 mm	0.01 mm	50±0.01 mm	0.01mm	6976367670580

3d Tester With Dial Indicator



Description

- Made in Germany
- Extremely slim, easy to operate
- Standard ceramic probe:φ3mm
- Top plastic case
- Incl. workshop's test certificate
- Not allowed to contact with liquid like water and oil
- No shocking
- Solvent-free detergent only

Art. No.	Measuring range	Shank Diameter	Length	Probe	Barcode
223-3607	1.5mm	Ø12mm	166mm	Ø3mm	6972727953607
223-7070	0.06inch	Ø12mm	166mm	Ø3mm	6972727957070

Centering Indicator



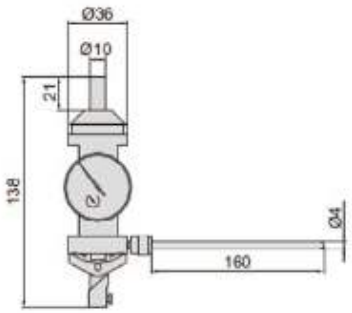

Description

- Suitable for the parts installed on drilling and milling machine to be centered in a faster manner
- With tolerance alarming pointers,With a standard pointy probe
- 45mm, 100mm, 154mm With 3 standard internal measuring probes(straight stem)
- 45mm, 100mm, 154mm With 3 standard external measuring probes(curved stem)
- With a standard handle
- Delivered with a manual
- Delivered with a warranty card
- Fancy wooden box

Art.No.	Range	Scale	Indication Error	Holder Dia	Bar code
4107-003	0-3 mm	0.01 mm	0.02 mm	10 mm	6972727959562