Dial Indicator



Description

- Economic type
- Metal casing
- Inside Tolerance markers
- Stem ø8mm h6
- With flat back and one lug back as accessory
- Deliver with certificate

Art No.	Range	Reading	Bezel Dia.	Barcode
4101-15E	0-10mm	0.01mm	58mm	6974804571476

Dial Indicator



Description

- DIN878
- Metal casing
- Stem φ8mm h6
- Inside tolerance markers
- With flat back
- Packed in cardbox
- Deliver with certificate

Art No.	Range	Reading	Bezel Dia.	Barcode
220-9231	0-5mm	0.01mm	42mm	6971570719231

Inch Dial Indicator



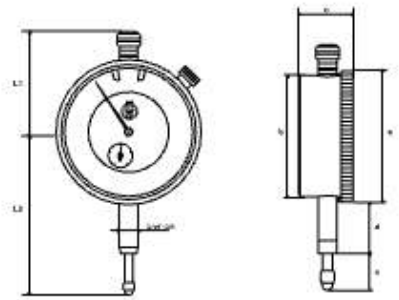

Description

- Aluminum casing
- Lifting screw with cushion rubber
- Inside Tolerance markers
- Stem ø3/8"
- With lug back
- Packed in cardbox
- Deliver with certificate

Overall Dimension(mm)

Range	a	b	c	d	e	L1	L2
0-0.5"	2.28"	2.11"	0.96"	0.69"	0.91"	1.48"	2.74"
0-1"	2.28"	2.11"	0.96"	0.69"	1.38"	1.48"	3.21"

Art No.	Range	Reading	Barcode
220-7008	0-0.5"inch	0.001"inch	6971570717008
220-7015	0-1"inch	0.001"inch	6971570717015
220-7022	0-0.5"inch	0.0005"inch	6971570717022
220-7039	0-1"inch	0.0005"inch	6971570717039