Universal Magnetic Stand



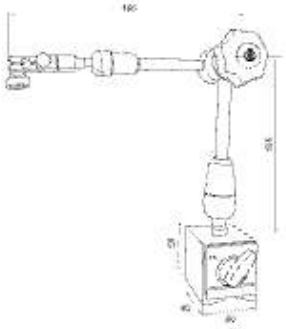

Description

- TOP quality
- Super locking power
- Blackening arm in 255mm length
- For dial indicators shank ø8mm and with dovetail for dial test indicactors
- With fine adjustment
- Prismatic magnetic base with on/off switch
- Packed in cardbox

Art No.	Magnetic Force	Base(LxWxH)	Barcode
230-8197	80kg	58x50x55mm	6971570718197

Universal Magnetic Stand



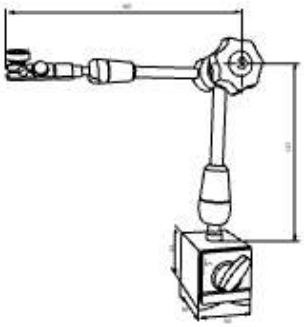

Description

- With central mechanical clamping
- Chromed steel arm in 350mm length
- For dial indicators shank ø8mm and with dovetail for dial test indicators
- With fine adjustment
- Prismatic magnetic base with on/off switch
- Packed in cardbox

Art No.	Magnetic Force	Base(LxWxH)	Barcode
230-8180	80kg	58x50x55mm	6971570718180

Universal Magnetic Stand



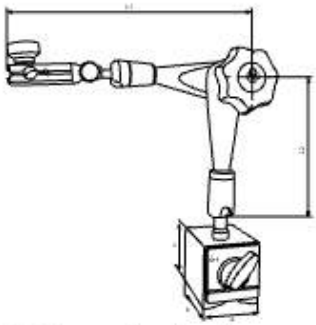

Description

- Super locking power
- For dial indicators shank φ6mm/8mm and with dovetail for dial test indicators
- With fine adjustment
- Prismatic magnetic base with ON/OFF switch
- Packed in cardbox

Overall Dimension(mm)

Range	a	b	c	L1	L2
60x50x55mm	50	60	55	148	100
73x50x55mm	50	73	55	176	145
73x50x55mm	50	73	55	176	205

Art No.	Magnetic Force	Base(LxWxH)	Arm Length	Barcode
7128-80	80Kg	60x50x55mm	275mm	6972727951818
7128-100	100Kg	73x50x55mm	355mm	6972727951825
7128-101	100Kg	73x50x55mm	415mm	6972727951832