Zero Setting Gauge

Description

- Magnetic base



Art. No.	Total height	Accuracy error	Barcode
7413-02M	50mm	0.01mm	6972727952587

Digital Tool Setting Gauge 0-2.5mm

Description

Used for determine the procedures at the origin position in machine coordinate system

- Inductive measurement system
- LED Display
- Response speed 1.6m/s
- IP65 Protection grade
- Light indicating at "0.000"
- Auto power off,when no operation for 5 minutes
- 3V Lithium battery,
  low voltage alarm: Display" ▭ "



Specification

Product Name	Digital tool setting gauge
Art No.	235-9521
Range	0-2.5mm
Resolution	0.001mm/0.00005"
Accuracy error	±0.002mm
Buttons	⏻...ZERO:Short press to powerd on and off Zero setting by long press In/mm:Short press for metirc,inch conversion
Protection Garde	IP65
Working Temperature	0~40℃
Storage and transportaion	-20~70℃
Overall dimension	Dia.x H:55x50mm
Execution Standard	Enterprise standard

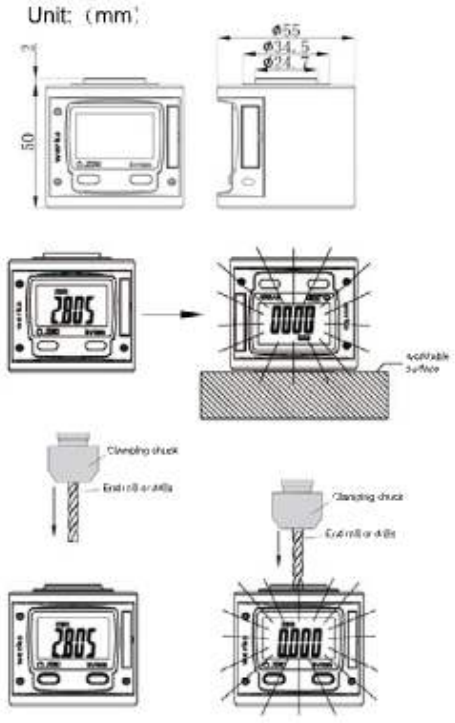

Digital Tool Setting Gauge

Step 1:Invert the tool setting gauge so that the upper datum plane is flat on the work-piece surface or countertop,long press ... ZERO button for about three seconds,and the display value will be zeroed,then the display backlight will lights up as a reminder.
Note: The display backlight will not go out until the display number is not "0".

Step 2:Put the tool setting gauge in the right direction and move the cutting tools to the datum plane until the the display shows"0"and the display backlight lights up, this means that the relative "0" position of the machine to the work-piece has been calibrated.