Dial Indicator



Description

- Metal casing
- Inside Tolerance markers
- Stem ø8mm h6
- With flat back (Back with lug available on request)
- Conforms to manufacturer standard
- Packed in cardbox
- Deliver with certificate

Art No.	Range	Reading	Bezel Dia.	Stem Dia.	Barcode	Remark
220-8879	0-20mm	0.01mm	58mm	8mm	6972727958879	
220-6988	0-30mm	0.01mm	58mm	8mm	6971570716988	
220-6995	0-50mm	0.01mm	58mm	8mm	6971570716995	
4102-100	0-100 mm	0.01 mm	80 mm	8mm	6976367674267	New

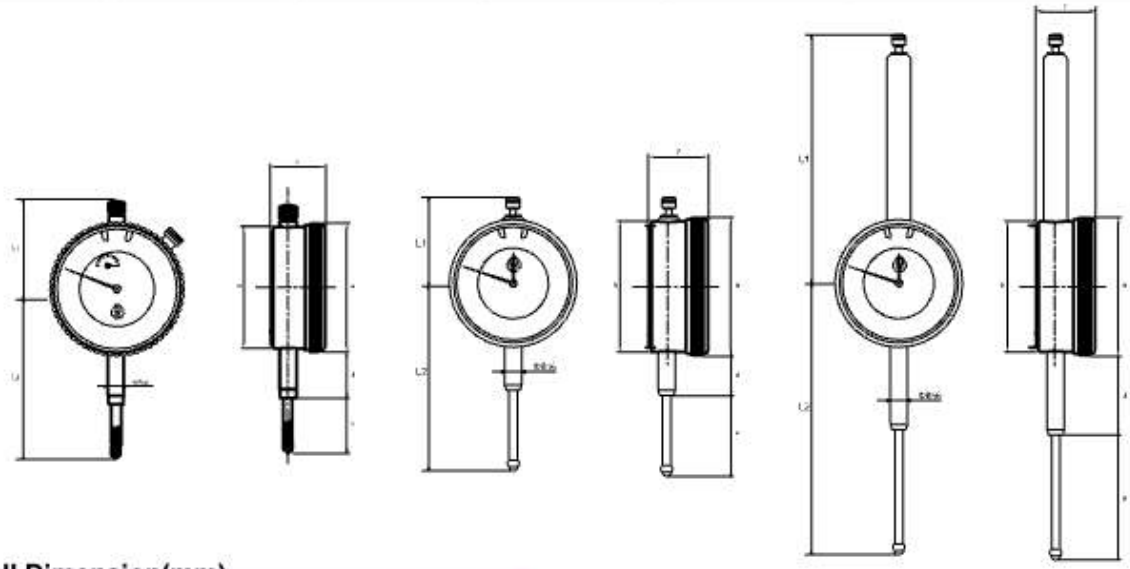

Overall Dimension(mm)

Art No.	Range	a	b	c	d	e	L1	L2
220-8879	0-20mm	58	55	25	22.5	29	39	80.5
220-6988	0-30mm	58	53.5	27.2	19.5	40.9	37.5	89.5
220-6995	0-50mm	58	53.5	27.2	39.5	57.7	108.3	126.2

