Precision Digital Height Gauge



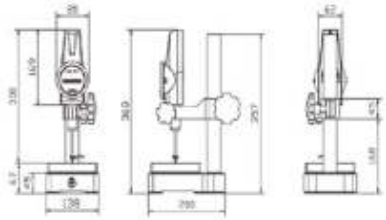





Description

- High precision and stability
- Working table made of ceramic
- 7 bits high brightness LED display
- Zero setting at any position
- MAX,MIN,MAX-MIN measurement
- mm/inch easy to convert
- USB data output
- Packed in carton

Art No.	2231-50ST
Barcode	6972727952754
Measuring Range	0-50mm
Resolution	0.001mm
Accuracy	0.003mm
Measuring force	1.0~1.5N
Dimesion of ceramic table	130x130mm
Response speed	Max 5000mm/s
Measuring tips	Conical tip,Flat tip,Ball tip
Working environment	Temperature 0~40°C ,Humidity 20~80%
Power adaptor	AC 100~240V 50~60Hz,DC5V/1A
Size	200x138x397mm
Net weight	11.6KG

Analog keyboard entry Measurement data can be directly input into excel, word.
Optional parts: WP-2231-01 USB data output cable and foot switch.

Vernier Height Gauge

216-7633 216-7640



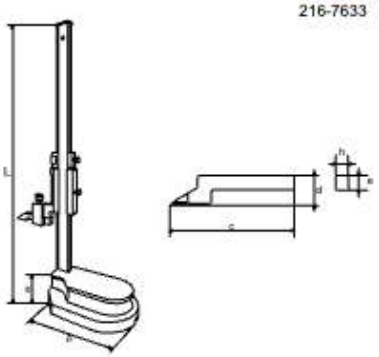

Description

- Accuracy according to DIN862
- Made of stainless steel,With fine adjustment
- Carbide-tipped scriber
- Scale and nonius satin chrome finished
- Sturdy cast iron base,lacquered and lapped bottom working face
- Packed in plastic case with inspection report

Overall Dimension(mm)

Range	c	d	e	h
0-300mm	76	25	8	6
0-600mm	105	25	12	10
0-1000mm	110	39	15	10

Art No.	Range	Reading	Accuracy error	Barcode
216-7633	0-300mm	0.05mm	0.06mm	6971570717633
216-7640	0-600mm	0.05mm	0.10mm	6971570717640
216-7162	0-1000mm	0.05mm	0.10mm	6972727957162